MAX-21RG
(13610)

MAX-21RG(P)
(13611)

TYPE 20E
(23618001)

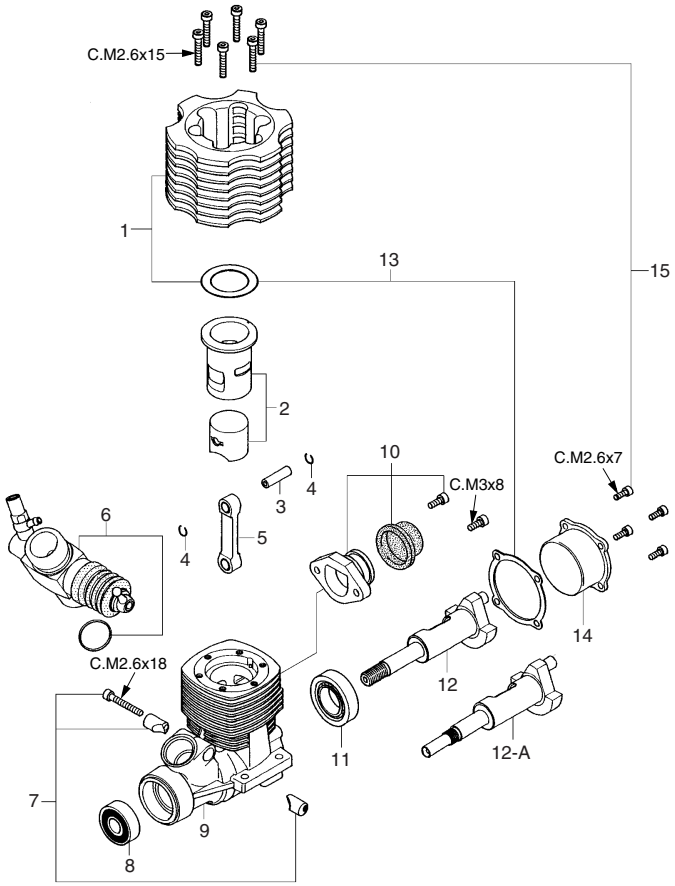

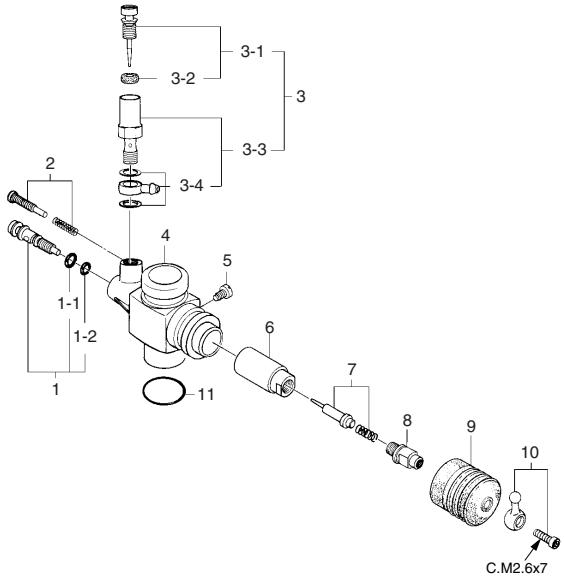

✻Type of screw
C...Cap Screw M...Oval Fillister-Head Screw
F...Flat Head Screw N...Round Head Screw S...Set Screw

No.	Code No.	Description
1	23604000	Heatsink Head
2	23603000	Cylinder & Piston Assembly
3	23906000	Piston Pin
4	23817000	Piston Pin Retainer (2pcs.)
5	23605000	Connecting Rod
6	23618001	Carburetor Complete (Type 20E)
7	23981700	Carburetor Retainer (with screw)
8	41614000	Crankshaft Ball Bearing (Front)
9	23601000	Crankcase
10	23626100	Exhaust Adaptor (No.5)
11	22830000	Crankshaft Ball Bearing (Rear)
12	23602000	Crankshaft (For 21RG)
12-A	23602010	Crankshaft (For 21RG(P))
13	23614000	Gasket Set
14	23607000	Cover Plate
15	22447005	Screw Set
	72411000	Super Air Cleaner 201 (W/two filter elements)
	72411020	201 Filter Elements (4pcs.)
	72411050	Element Plate Set Comprising:
	72411010	Center Screen
	72411040	Intake Elbow
	72411030	Center Tube

No.	Code No.	Description
1	23818180	Mixture Control Valve Assembly
1-1	46066319	"O" Ring(L) (2pcs.)
1-2	22781800	"O" Ring(S) (2pcs.)
2	23818500	Throttle Stop Screw
3	23618190	Needle Valve Assembly
3-1	23618197	Needle Assembly
3-2	46066319	"O" Ring
3-3	23618194	Needle Holder Assembly
3-4	23818176	Universal Nipple No.9
4	23618102	Carburetor Body
5	45581820	Slide Valve Guide Screw
6	23818251	Slide Valve
7	23818310	Metering Needle Assembly
8	23818220	Slide Valve Extension
9	22884220	Dust Cover
10	23818400	Ball Link No.1
11	29015019	Carburetor Rubber Gasket

O.S. GENUINE PARTS & ACCESSORIES

Code No.	Description
23908000	Drive Hub
72106140	Exhaust Header Pipe Assembly (For T-2040)
72106150	Exhaust Header Pipe Assembly (For T-2050)
72106040	T-2040 Tuned Silencer Assembly
72106060	T-2050 Tuned Silencer Assembly
72106050	T-2040 Tuned Silencer Complete Set
72106070	T-2050 Tuned Silencer Complete Set
72106300	Super Joint Tube 21
72106030	T-2030 Tuned Silencer Assembly
71530200	Crankshaft Clamp 1521
73300305	Dust Cap Set ∅3 (5pcs.) (for Carburetor Nipple)
73300812	Dust Cap Set ∅8 (3pcs.) (for Tuned Silencer)
73301612	Dust Cap Set ∅16 (3pcs.) (for Carburetor)
73301812	Dust Cap Set ∅18 (3pcs.) (for Exhaust)
79871020	M2.6x7 Cap Screw Set (10pcs.)
79871050	M2.6x15 Cap Screw Set (10pcs.)
71521000	Long Socket Wrench With Plug Grip

The specifications are subject to alteration for improvement without notice.